CERAMIC RING FOR DLD40 - SIMPLE METALLIZED

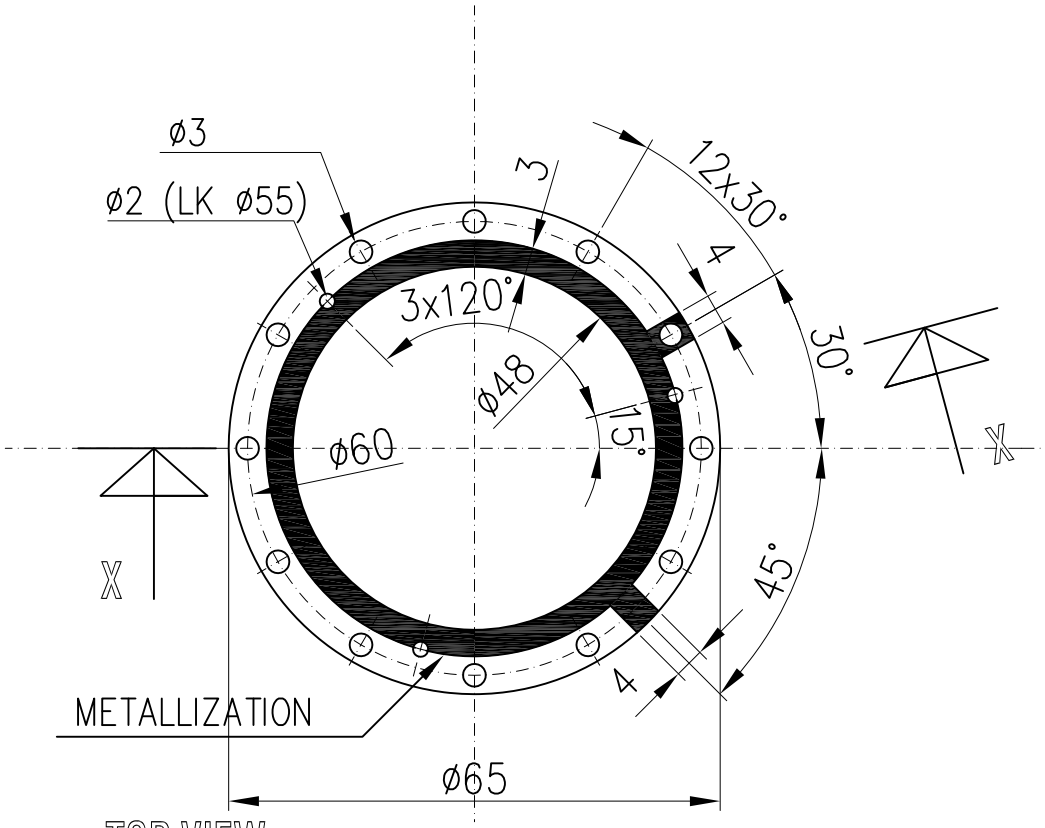

TOP VIEW

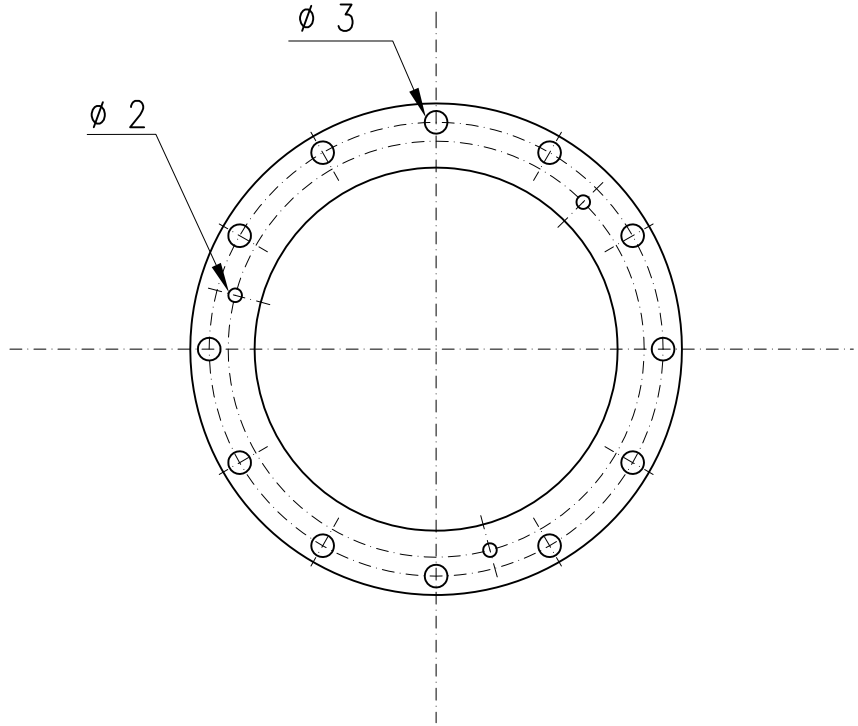

BOTTOM VIEW

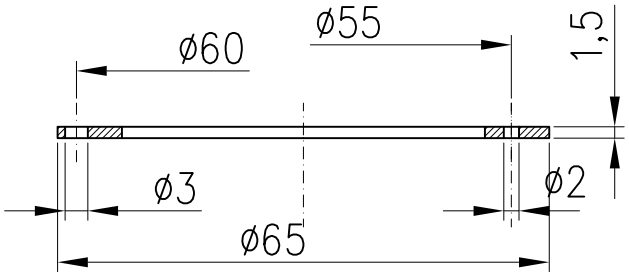

SECTION X-X